ZJ-11N-550

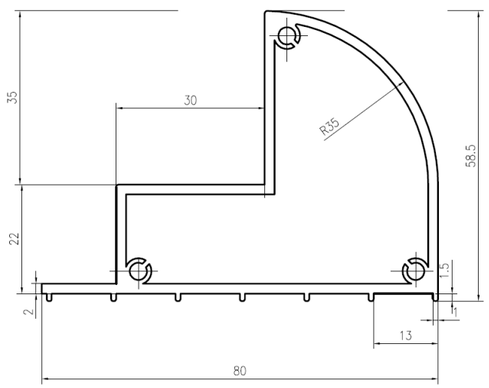

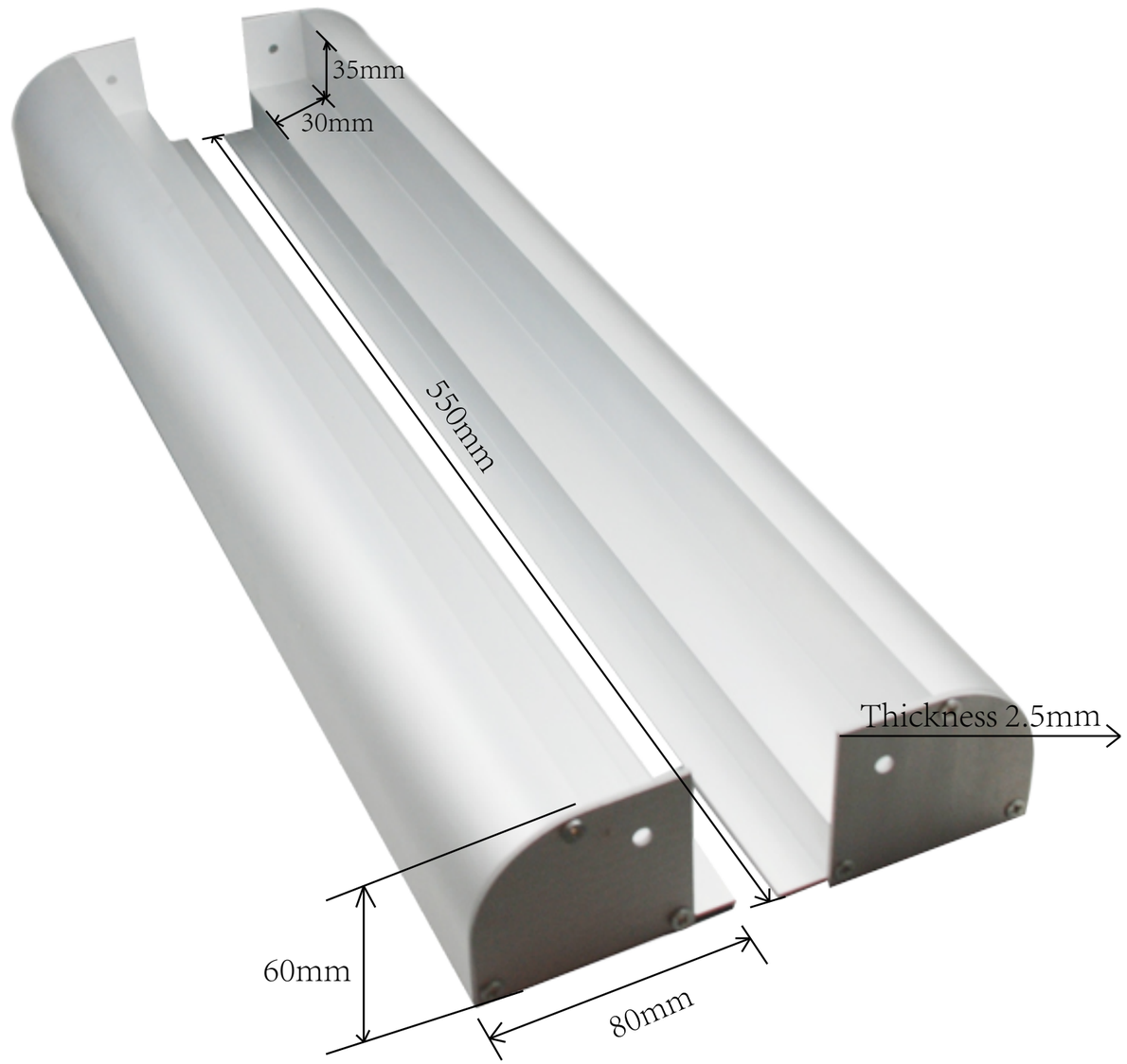

Measure unit: mm
Material:
*Profile: Aluminium
*Side Cover: Aluminium
Color: White

Mounting Bracket Aluminium	OffigridTec
	Mounting Bracket
	ZJ-11N-550